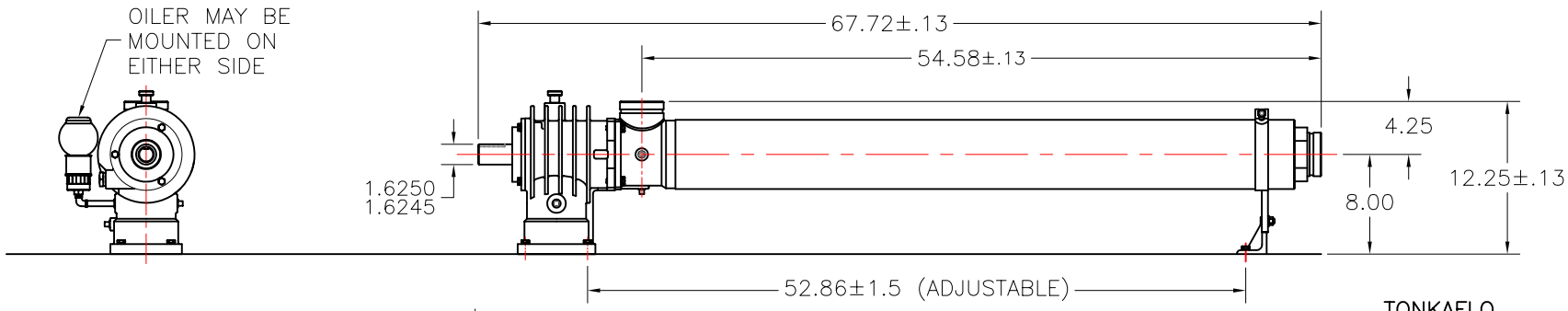

TONKAFLO
SS5522E

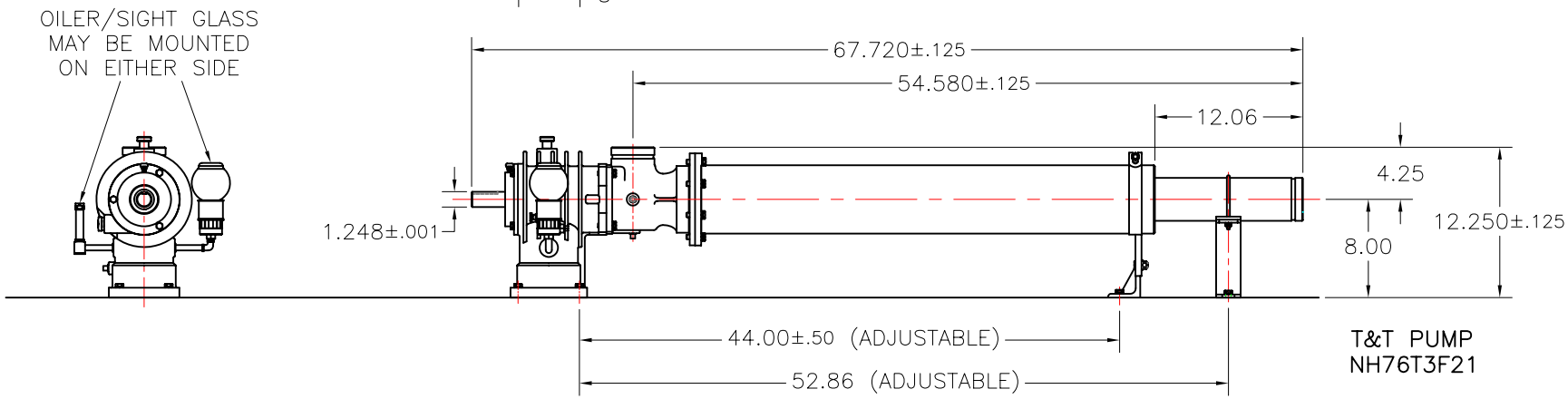

T&T PUMP
NH76T3F21

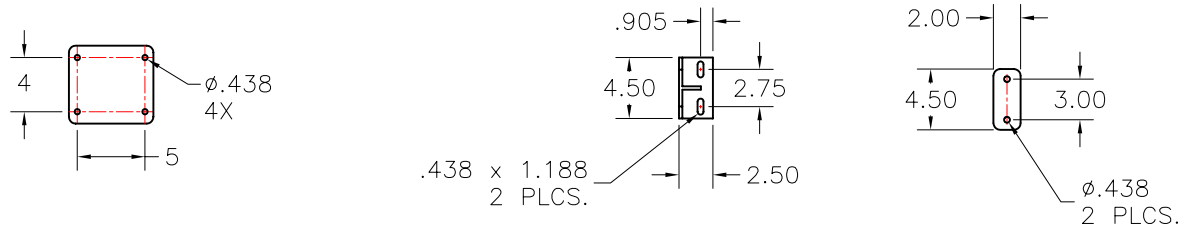

NOTES:

1. DIMENSIONS ARE IN INCHES. DIMENSIONS ARE FOR REFERENCE UNLESS NOTED.
2. INLET CONNECTION MATES WITH 3" VICTAULIC TYPE CLAMPED UNION.
3. DISCHARGE CONNECTION MATES WITH 3" VICTAULIC TYPE CLAMPED UNION.

T&T PUMP	UNLESS OTHERWISE NOTED LINEAR DIMS. IN INCHES. TOLERANCES DECIMAL .X+/- .XX+/- .XXX+/- FINISH ANGULAR +/- DO NOT SCALE DRAWING	T&T PUMP CO. INC. FAIRMONT, WV 26554
	Drawing no.	DRAWING TITLE NH76T3F21 TO SS5522E COMPARISON
	DRAWN MDE 5-02-07	DWG SIZE A — CAD file NH76T3F21 TO SS5522E COMPARISON
	CHECK	
	DESIGN	
	ENGR	SCALE none — RELEASE DATE 5-27-09 — Sheet 1 of 1