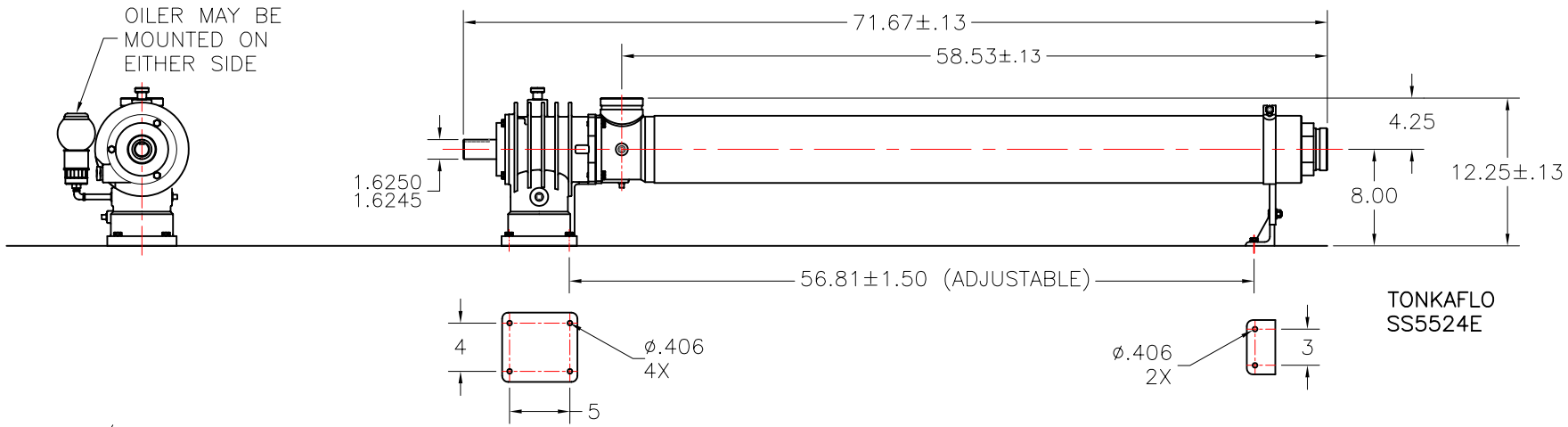

TONKAFLO
SS5524E

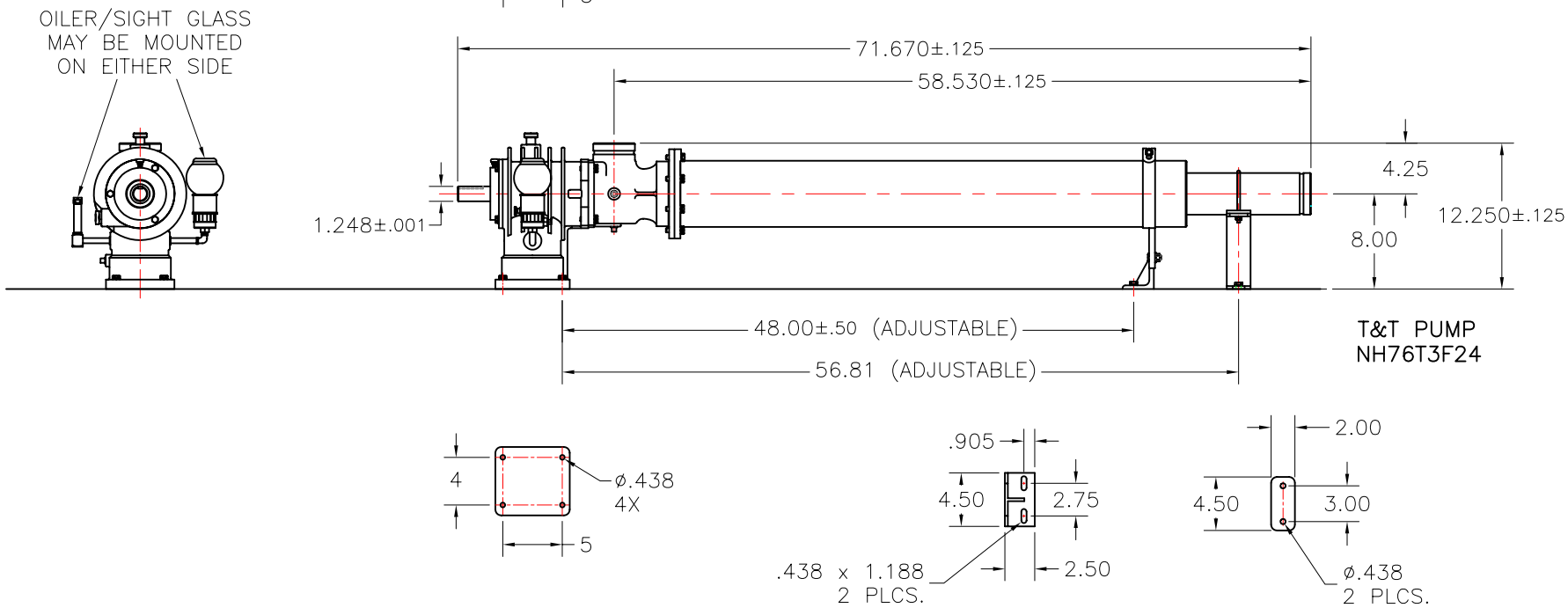

T&T PUMP
NH76T3F24

NOTES:

1. DIMENSIONS ARE IN INCHES. DIMENSIONS ARE FOR REFERENCE UNLESS NOTED.
2. INLET CONNECTION MATES WITH 3" VICTAULIC TYPE CLAMPED UNION.
3. DISCHARGE CONNECTION MATES WITH 3" VICTAULIC TYPE CLAMPED UNION.

T&T PUMP	UNLESS OTHERWISE NOTED LINEAR DIMS. IN INCHES. TOLERANCES DECIMAL. .X+/- .XX+/- .XXX+/- FINISH ANGULAR +/- DO NOT SCALE DRAWING	T&T Pump Co. Inc. Fairmont, WV 26554
	Drawing no.	DRAWING TITLE NH76T3F24 TO SS5524E COMPARISON
	DRAWN MDE 9-11-06	DWG SIZE A — CAD file NH76T3F24 TO SS5524E COMPARISON
	CHECK	
	DESIGN	
	ENGR	SCALE none — RELEASE DATE 5-27-09 — Sheet 1 of 1