NOTES:
1. BOTH PUMPS HAVE A 3" VICTAULIC INLET AND A 3" VICTAULIC DISCHARGE.
2. MOTOR SHOWN IS A 254TC.
3. DIMENSIONS ARE FOR REFERENCE UNLESS OTHERWISE NOTED.

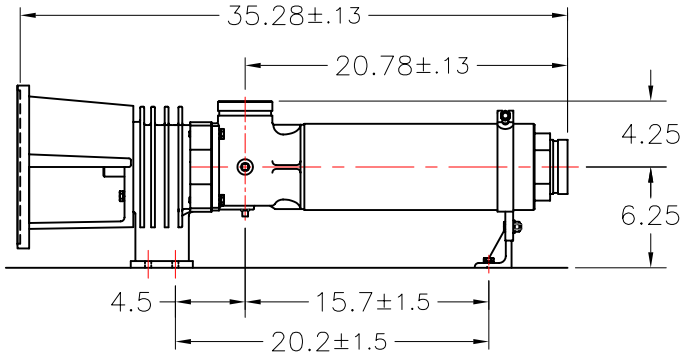

SS12504D
TONKAFLO PUMP

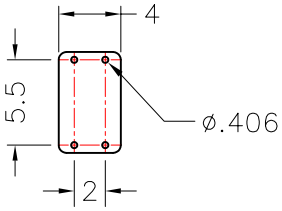

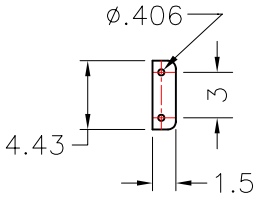

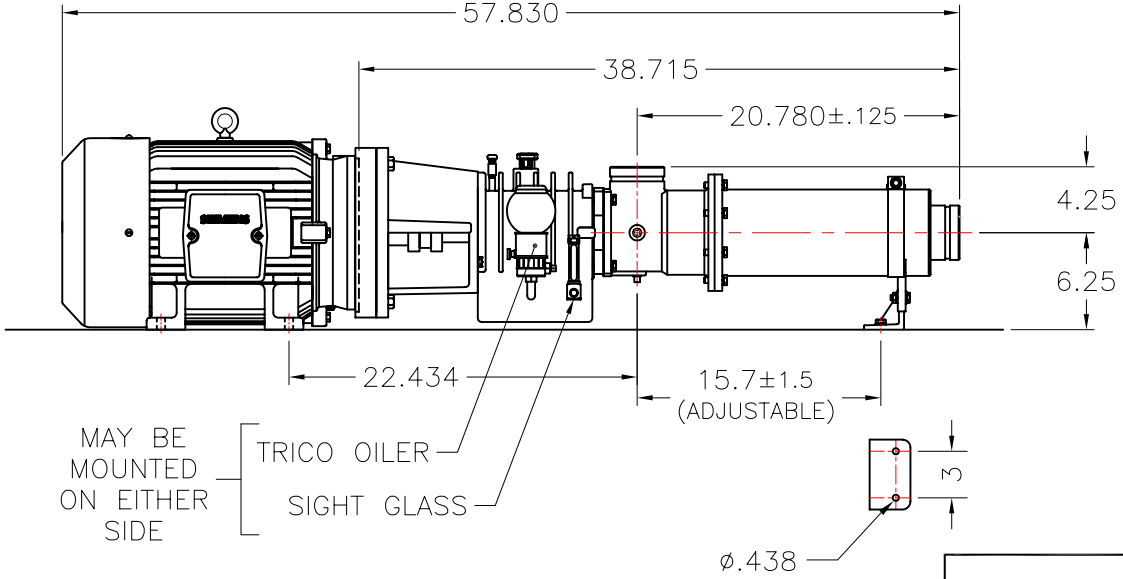

NH80K2F4E15A
T&T PUMP

T&T PUMP	UNLESS OTHERWISE NOTED LINEAR DIMS. IN INCHES. TOLERANCES DECIMAL .X+/- .XX+/- .XXX+/- FINISH ANGULAR +/- DO NOT SCALE DRAWING	T&T PUMP CO. INC. FAIRMONT, WV 26554
	Drawing no.	DRAWING TITLE NH80K2F4E15A TO SS12504D COMPARISON
	DRAWN CWR 8-18-09	DWG SIZE A — CAD file NH80K2F4 TO SS12504D COMPARISON
	CHECK	
	DESIGN	
	ENGR	SCALE none — RELEASE DATE 8-18-09 — Sheet 1 of 1